Technical data sheet

Connectable data cable protection, 2x2-pole, direct earthing, with visual signalling, 5 V
Item number: 5080357

Plug-in data cable protection type 1+2/D1=C2 for the use in measurement, control and regulation technology

- Protective device for multi-wire systems
- Direct shield earthing
- Frequency range to 100 MHz
- Earthing possible via the DIN rail or the connection cable
- Narrow structural width of 17.5 mm
- Hight level of system availability – no signal disruption without protection module
- With visual signalling and the option for remote signalling via the voltage supply PDP-PS
- Integrated bus connector included

Application: Universal lightning and surge protection for data transmission devices in MCR technology.

MSR LPZ 0→2

Master data

Item number	5080357
Type	PDP-2x2-5-D-OS
Description 1	Pluggable data line protection
Description 2	2x2 pole direct earth
Manufacturer	OBO
Dimension	5V
Smallest sales unit	1
Unit of quantity	Piece
Weight	8.6 kg
Weight unit	kg/100 pc.
CO2 Footprint (GWP) Cradle-to-Gate	0,7765 kg CO2e / 1 Piece

Technical data sheet

Connectable data cable protection, 2x2-pole, direct earthing, with visual signalling, 5 V
Item number: 5080357

Dimensions

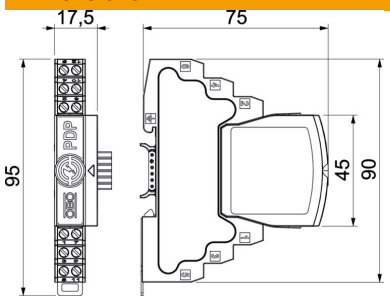

Length	75 mm
Width	17.5 mm
Height	95 mm

Technical data

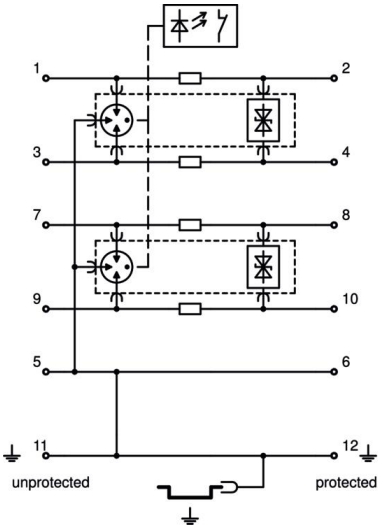

Connection cross-section, flexible, max.	1.5 mm²
Connection cross-section, flexible, min.	0.14 mm²
Connection cross-section, multi-wire, max.	2.5 mm²
Connection cross-section, multi-wire, min.	0.14 mm²
Connection cross-section, rigid, max.	2.5 mm²
Connection cross-section, rigid, min.	0.14 mm²
Number of poles	4
Version for	2x2-pole
Insertion loss	≤3 dB
Earthing via:	Connection cable / DIN rail
Total discharge current (10/350)	5 kA
Total discharge current (8/20)	20 kA
Cut-off frequency	100 MHz
Maximum continuous voltage AC	4.2 V
Maximum continuous voltage DC	6 V
Lightning impulse current	2.5 kA
Capacity (wire-wire)	≤30 pF
Capacity (wire-earth)	≤30 pF
Kategorie	Type 1+2 / D1+C2
Lightning protection zone LPZ	0→2
Lengthwise resistance	1.2 ± 5%
Mounting of input / output	Screw terminals
Mounting type	DIN rail 35 mm
Nominal discharge current (8/20 µs)	10 kA
Nominal load current AC	0.425 A
Nominal load current DC	0.6 A
Total impulse durability into C2 (8/20)	20 kA
Testing standard	IEC 61643-21
ROHS-conformant	yes
Shielding connection available	yes
Screening	Direct
Protection rating	IP20
Protection level wire-wire	100 V

Technical data sheet

Connectable data cable protection, 2x2-pole, direct earthing, with visual signalling, 5 V
Item number: 5080357

Technical data

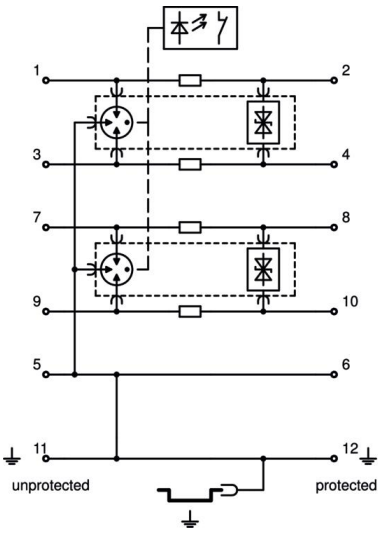

Protection level wire-earth	850 V
Series resistance per wire	1,2 Ω ± 5%
Signalling on device	None
SPD to EN 61643-11	Type 1+2
SPD to IEC 61643-11	Class I+II
SPD to IEC 61643-21	Class I+II / D1+C2
Plug-in system	Terminal
Impulse durability wire-wire	10 kV / 5 kA
Impulse durability wire-earth	10 kV / 5 kA
Permitted temperature range, max.	80 °C
Permitted temperature range, min.	-40 °C