# Technical data sheet

## Cable ladder with Z rung, standard FT

## Item number: 7098132

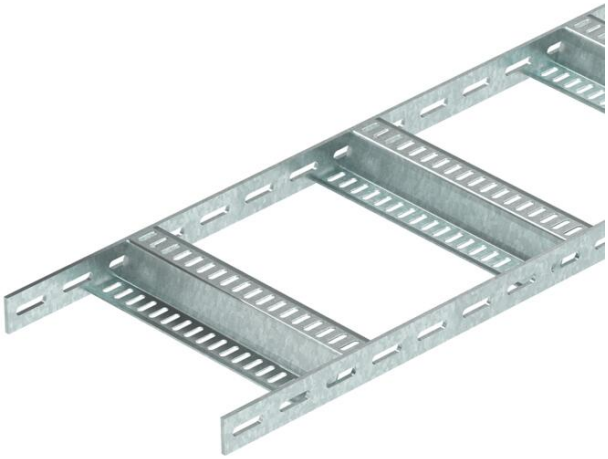

Shipbuilding cable ladder with perforated side rail of side height 40 mm with welded, perforated Z rungs. Load tested according to IEC in conjunction with connector, type SLV.

The shipbuilding cable ladder, including fittings, is also available in stainless steel on request. Powder coating according to RAL colours possible.

**St** Steel

**FT** Hot-dip galvanised

### Master data

| | |
|---|---|
| Item number | 7098132 |
| Type | SLZ 100 FT |
| Description 1 | Cable ladder, shipbuilding |
| Description 2 | with Z-rung |
| Manufacturer | OBO |
| Dimension | 40x110x3000 |
| Colour | zinc |
| Material | Steel |
| Surface | Hot-dip galvanised |
| Surface standard | DIN EN ISO 1461 |
| Smallest sales unit | 3 |
| Unit of quantity | Metre |
| Weight | 328.667 kg |
| Weight unit | kg/100 m |
| CO2 Footprint (GWP) Cradle-to-Gate | 7,8595 kg CO2e / 1 Meter |

# Technical data sheet

## Cable ladder with Z rung, standard FT

## Item number: 7098132

### Dimensions

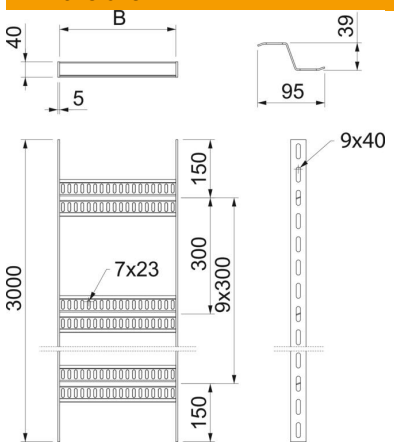


| | |
|---|---|
| Dimension | 40x100 |
| Length | 3,000 mm |
| Width | 100 mm |
| Height | 40 mm |
| Dimension B | 110 mm |

### Technical data

| | |
|---|---|
| Version of the rungs | Profile perforated |
| Side rail version | Flat profile |
| Fastening of rung | Welded |
| Maintain electrical functions | no |
| ROHS-conformant | yes |
| Rustproof steel, pickled | no |
| Side perforation | yes |
| Rung distance | 300 mm |
| Wide-span version | no |
| Rail thickness | 5 mm |

### Loads

| | |
|---|---|
| Support spacing 1.5 m | 2.8 kN/m |
| Support spacing 2.0 m | 1.75 kN/m |
| Support spacing 2.5 m | 1 kN/m |
| Support spacing 3.0 m | 0.6 kN/m |

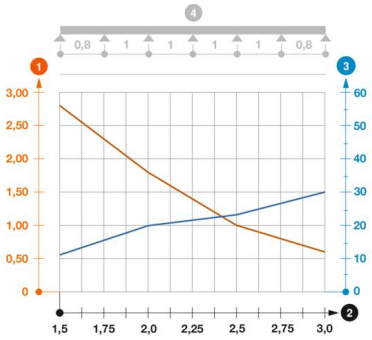


**Load diagram, cable ladder, type SLZ**

1. Permitted cable tray/ladder load in kN/m without man load
2. Support width in m
3. Rail bend in mm at permitted kN/m
- Load curve with cable tray/ladder width in mm
- Strut bend curve according to support width
4. Load scheme during testing