# Technical data sheet

## Empty housing X 02

## Item number: 2005594

Junction box for the connection of cables and lines indoors and in outdoor areas. Square design without entries. Suitable for wall and ceiling mounting with the option to fasten outside, inside or to mount via the corner domes. Particularly impact resistant with IK09. Cover with quick lock, sealable. Made from halogen-free and UV-resistant materials.

Junction box according to EN 60670. Impact resistance IK09 according to EN 50102. Protection rating IP67 according to EN 60529.

PC Polycarbonate

### Master data

| | |
|---|---|
| Item number | 2005594 |
| Type | X02C SW |
| Description 1 | Empty Enclosure |
| Manufacturer | OBO |
| Dimension | 95x95x72 |
| Colour | Graphite black; RAL 9011 |
| Material | Polycarbonate |
| Smallest sales unit | 1 |
| Unit of quantity | Piece |
| Weight | 17.5 kg |
| Weight unit | kg/100 pc. |
| CO2 Footprint (GWP) Cradle-to-Gate | 0,7382 kg CO2e / 1 Piece |

# Technical data sheet

## Empty housing X 02

## Item number: 2005594

### Dimensions

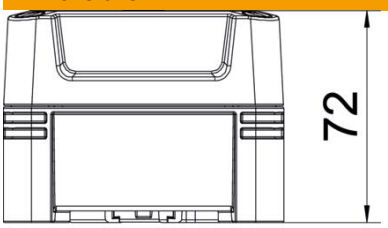


| | |
|---|---|
| Length | 95 mm |
| Width | 95 mm |
| Height | 72 mm |

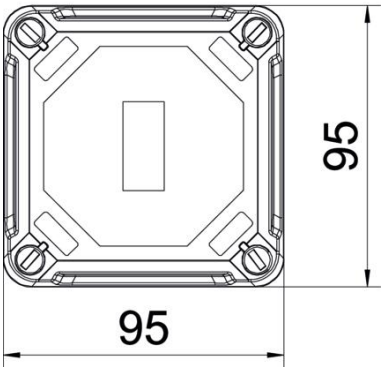


### Technical data

| | |
|---|---|
| Cover fastening | Screwed |
| Shape | Square |
| Suitable for outdoor use | yes |
| Clear internal dimensions | 85x85x57 mm |
| with lid | yes |
| Mounting type | Surface-mounted |
| ROHS-conformant | yes |
| Protection rating | IP67 |
| Protection rating IK code | IK09 |
| Protection class | II |
| Permitted temperature range, max. | 65 °C |
| Permitted temperature range, min. | -25 °C |
| Weatherproof | yes |